RONDO STEEL STUD DRYWALL FRAMING SYSTEM

SUMMARY

The Rondo Steel Stud Drywall Framing System provides a durable, practical and lightweight structure for internal plasterboard walls and for specific external wall systems. The availability of various sizes, complimentary components such as noggin tracks, curved tracks and special cleats ensure Rondo Stud and Track wall systems are available to suit almost all situations.

SUITABLE FOR:

- Non-load bearing partition walls
- Load Bearing Walls by design
- Steel Stud Ceiling Systems
- Window and Door Jambs
- Non-Fire Rated Systems
- Fire Rated Systems
- Acoustic Wall Systems by design
- External Wall systems by design
- Light Weight Floor Joists
- Bulkheads

SPECIAL FEATURES

- Available in custom lengths
- Majority of Stud and Track is hemmed for safety and increased strength
- Bell mouthed service holes to mitigate damages to services
- Flexible Track available for curved walls
- Manufactured with a minimum coating of Z275
- Profiles widths range from 51 to 150mm, and gauges from 0.50 to 1.15BMT.
- MAXIframe External Wall Framing System made from 1.2BMT G500 steel
- Includes unique QUIET STUD® profile for better acoustic performance

IN PRACTICE

Rondo's Stud and Track Systems have been used all over the world, including in the ***Mumbai International Airport development in India*** and Australia's largest tertiary institution and award-winning project, ***RMIT University in Melbourne***. For the high-profile ***Fiona Stanley Hospital project in Perth***, its design required special length products – therefore, Rondo produced large quantities of the non-standard Stud and Track sizes to ensure the project could progress rapidly.

IMPORTANT NOTE:
Rondo recommends its products and systems are installed by a qualified tradesperson and according to the relevant codes and standards outlined on page 256 of this manual.

CONTENTS:

TO TOP PAGE

RONDO STEEL STUD & TRACK SECTIONS

LIPPED WALL STUDS

401	51mm x 0.50bmt Stud with Hem
112	64mm x 0.50bmt Stud with Hem
403	76mm x 0.55bmt Stud with Hem
251	92mm x 0.55bmt Stud with Hem
489	51mm x 0.75bmt Stud
491	64mm x 0.75bmt Stud
493	76mm x 0.75bmt Stud
495	92mm x 0.75bmt Stud
511	150mm x 0.75bmt Stud
661	64mm x 1.15bmt Stud
671	76mm x 1.15bmt Stud
681	92mm x 1.15bmt Stud
691	150mm x 1.15bmt Stud

QUIET STUD

RQST	92mm x 0.55bmt

FLEXIBLE TRACK

103	51mm Flexible Track
104	64mm Flexible Track
105	76mm Flexible Track
106	92mm Flexible Track
107	64mm Deflection Head Flexible Track
108	76mm Deflection Head Flexible Track
109	92mm Deflection Head Flexible Track
110	150mm Deflection Head Flexible Track

WALL TRACKS

400	51mm x 28mm x 0.50bmt with hem
111	64mm x 28mm x 0.50bmt with hem
402	76mm x 28mm x 0.50bmt with hem
250	92mm x 28mm x 0.50bmt with hem
490	51mm x 28mm x 0.70bmt with hem
492	64mm x 28mm x 0.70bmt with hem
494	76mm x 28mm x 0.70bmt with hem
496	92mm x 28mm x 0.70bmt with hem
660	64mm x 32mm x 1.15bmt Track
670	76mm x 32mm x 1.15bmt Track
680	92mm x 32mm x 1.15bmt Track

LIPPED WALL STUDS — FIRE TESTED

401/112/403/251/489/491/ 493/495//511

661/671/681/691

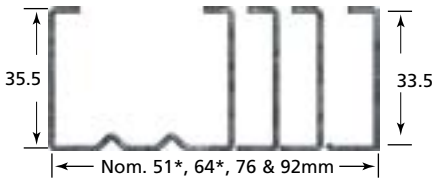

0.50/0.55 BMT

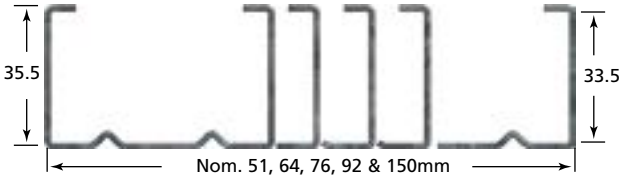

0.75 BMT

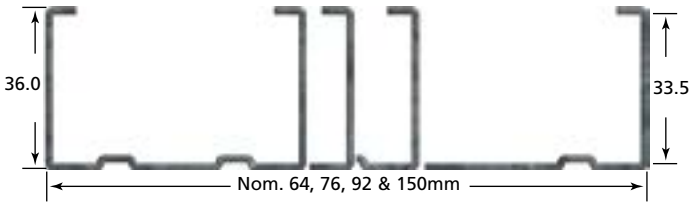

1.15 BMT

QUIET STUD

RQST

FLEXIBLE TRACK

103/104/105/106/ 107/108/109/110

WALL TRACKS

0.50/0.70 BMT

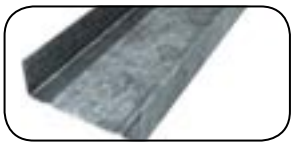

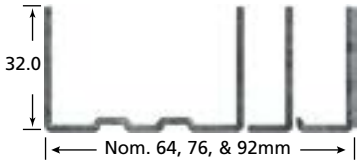

1.15 BMT

DEFLECTION HEAD TRACKS

480	64mm x 50mm x 0.50bmt Deflection Head Track
482	76mm x 50mm x 0.50bmt Deflection Head Track
483	92mm x 50mm x 0.50bmt Deflection Head Track
488	51mm x 50mm x 0.70bmt Deflection Head Track
497	64mm x 50mm x 0.70bmt Deflection Head Track
498	76mm x 50mm x 0.70bmt Deflection Head Track
499	92mm x 50mm x 0.70bmt Deflection Head Track
510	150mm x 50mm x 0.75bmt Deflection Head Track
663	64mm x 50mm x 1.15bmt Deflection Head Track
673	76mm x 50mm x 1.15bmt Deflection Head Track
683	92mm x 50mm x 1.15bmt Deflection Head Track
690	150mm x 50mm x 1.15bmt Deflection Head Track

SLOTTED DEFLECTION HEAD TRACK

S499	92mm x 0.70 bmt Slotted Deflection Head Track
S510	150mm x 0.75 bmt Slotted Deflection Head Track
S683	92mm x 1.15 bmt Slotted Deflection Head Track
S690	150mm x 1.15 bmt Slotted Deflection Head Track

NOGGING TRACKS

501	Continuous Nogging Bracket
503	51mm x 0.70bmt Nogging Track
504	64mm x 0.70bmt Nogging Track
505	76mm x 0.70bmt Nogging Track
506	92mm x 0.70bmt Nogging Track
507	150mm x 0.75bmt Nogging Track

CLIPS

126	Staggered Stud Clip (Acoustic)
704	Partition mounting cip

CONTROL JOINT

P35	Flexible Control Joint

DEFLECTION HEAD TRACKS

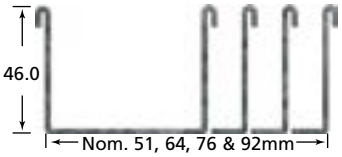

0.50/0.70 BMT

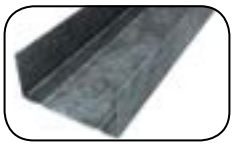

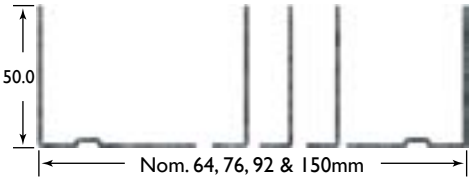

0.75/1.15 BMT

SLOTTED DEFLECTION HEAD TRACK

MAXITRACK

NOGGING TRACKS

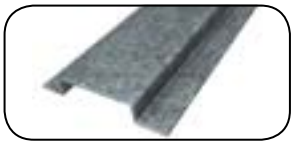

NOGGING BRACKET

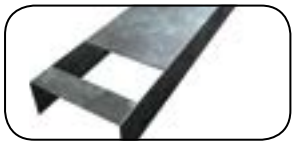

NOGGING TRACK

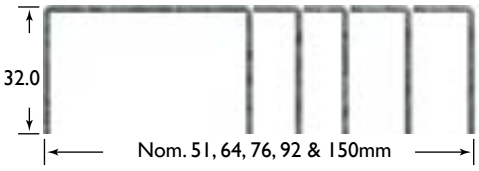

CLIPS

126

704

CONTROL JOINT

P35

INSTALLATION INFORMATION: WALLS

Tracks

Track sections provide a friction fit for the studs, which not only holds the studs in position until the lining board is fitted, but also provides a slip joint to allow for movement in the structure. For this reason do not screw the lining board to the track sections unless specifically stated.

Track sections 0.50bmt and 0.70bmt have hemmed flanges with nominal heights of 29mm and 46mm for standard and deflection head track respectively. 1.15 bmt track sections are not hemmed and have nominal flange heights of 32 and 50mm.

In general, where walls are lined both sides, standard tracks are used unless the project engineer has indicated that deflection heads are required; for example, under a concrete slab or where the wall height is 4800mm or greater. For stud framing unlined or only lined one side, see notes accompanying Nogging Tables within this document.

There is no requirement to isolate the track sections from slabs, unless specifically stated.

Track sections are nominally 3000mm long and should be fixed at not more than 600mm centres. Fixings should be placed within 100mm from either end of the track sections.*

FRICTION JOINTS

Friction fit and deflection heads require special detailing to achieve their design capacity (*refer to Figure 2 for specific details).*

The maximum wall height tables have been checked assuming a friction joint between the stud and track*.

* In some seismic areas these connection details may not be valid. Please check with your nearest Rondo Office prior to commencing installation.

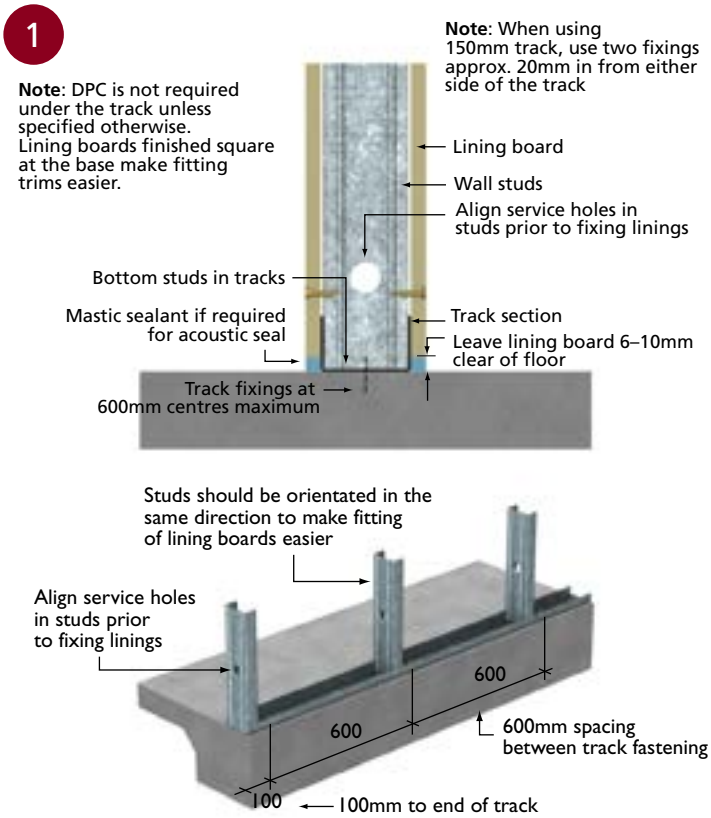

TRACK FIXING DETAILS

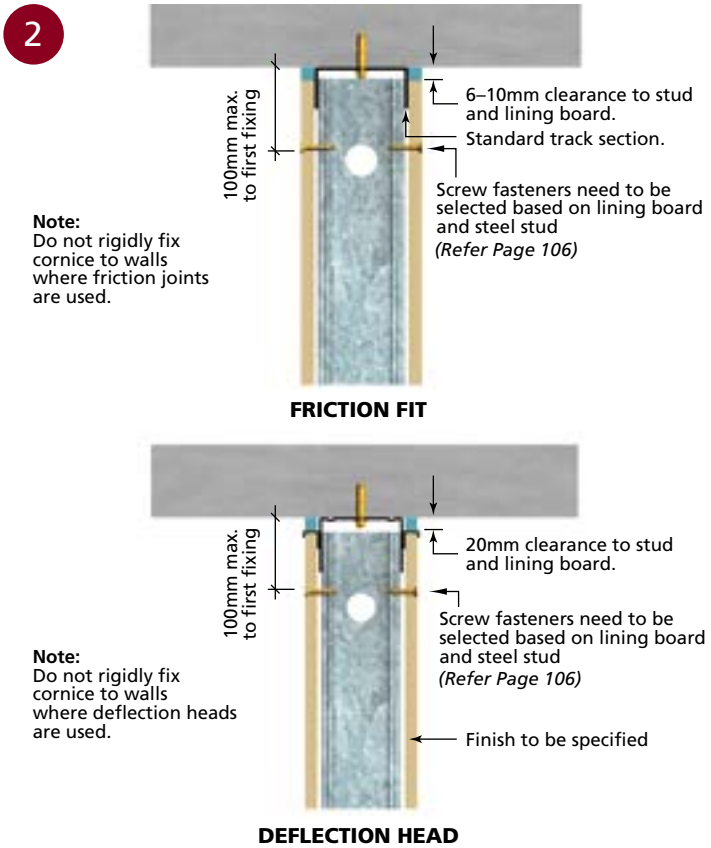

FRICTION FIT/DEFLECTION HEAD

TO TOP PAGE

Slotted Deflection Head Track (MAXItrack®)

The MAXItrack® is slotted along the flanges to provide a positive connection between the stud and the track as shown in Fig 3 by the use of 2 #10 screws, one each side, to greatly increase the connection capacity of the stud to head track connection.

By using MAXItrack®, it is no longer necessary to install Nogging track 100mm below the head track. Currently, MAXItrack® is available in 92 & 150 mm sizes.

FIXING TO CONCRETE:

The standard clearance between the top of the stud and the slab soffit is 20mm, which accommodates up to 15mm incremental slab deflection, with tolerance.

FIXING TO STEELWORK:

Where the steelwork carries roof or floor loads a deflection head will be required. Where the steelwork is in place only as a lateral support to the stud framing a deflection head is not required.

For roof uplift the MAXItrack® can be installed with an initial stud clearance of 5mm which will give an allowance of up to 15mm for uplift.

NOTE:

The allowance for structural movement should always be confirmed by the project engineer prior to commencing sitework.

3

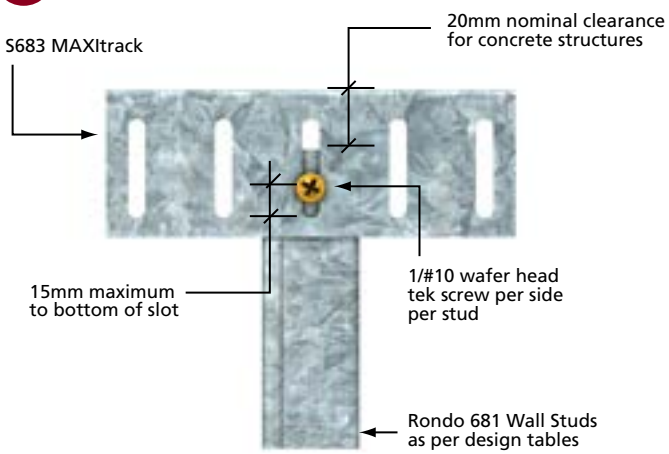

TYPICAL MAXITRACK CONNECTION DETAIL

INSTALLATION INFORMATION: WALLS (continued)

Wall Studs

The Rondo 0.50, 0.55 and 0.75bmt wall studs have standard 25mm bell-mouthed service holes. Being bell-mouthed with no protruding sharp edges eliminates the need for fitting grommets for electrical cabling.

Punched round holes are processed at designated centres along the 1.15bmt studs.

Mountain knurling along the flanges of the studs are designed to provide the screw point with a positive location during fitting of the lining board.

In situations where the stud length is shorter than that required, the 0.50, 0.55 and 0.75bmt studs may be spliced to extend the overall stud length. Studs of 1.15bmt or greater may be spliced back to back. *Refer to Table 1 for splicing details.*

Boxing Studs of 0.50, 0.55 and 0.75bmt and fixing Studs of 1.15bmt back to back provides greater rigidity at window and door openings and also at points where extra load carrying capacity is required – such as shelf loads.

The maximum wall height and ceiling span tables have been formulated in accordance with the requirements of the Building Code of Australia (BCA) Specification C1.8 "Structural Tests for Lightweight Construction".

4

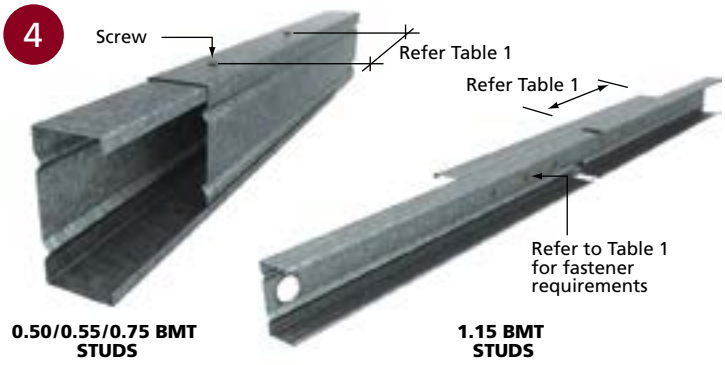

■ SPLICED STUDS

TABLE 1: FIXING GUIDE FOR SPLICED STUDS

STUD GAUGE (BMT)	WALL HEIGHT (m)	SPLICE LOCATION (%)	SPLICE LENGTH (mm)	NO. OF FASTENERS
0.50/0.55	0 – 4	10	330	2
		25	690	3
	4 – 6	10	740	3
		25	1540	4
0.75	0 – 4	10	250	2
		25	520	2
	4 – 6	10	560	2
		25	1160	3
1.15	0 – 4	10	300	3
		25	300	3
	4 – 6	10	450	3
		25	540	4

NOTES:
1. *Splices to be alternated top and bottom along wall.*
2. *Splicing of studs shall not be undertaken for load bearing (axial) walls*
3. *Do not splice studs between 25% – 75% of the wall height*
4. *All fasteners shall be #8 tek screws, or equivalent.*
5. *Walls may be lined both sides or one side.*
6. *Maximum stud spacing 600mm centres.*

5

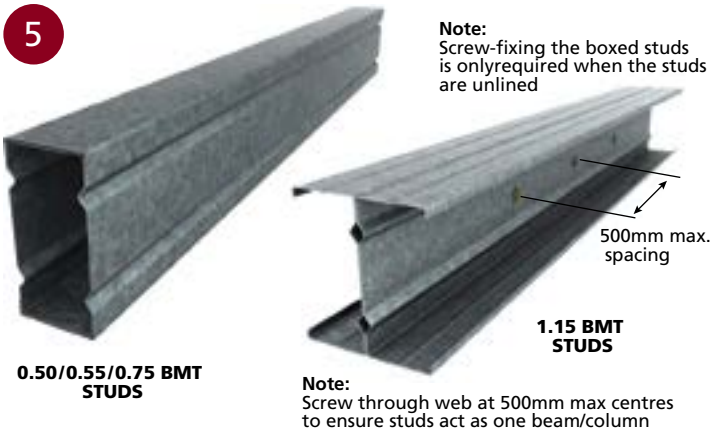

■ BOXED/BACK-TO-BACK STUDS

TO TOP PAGE

Wall Studs: Typical Applications

6

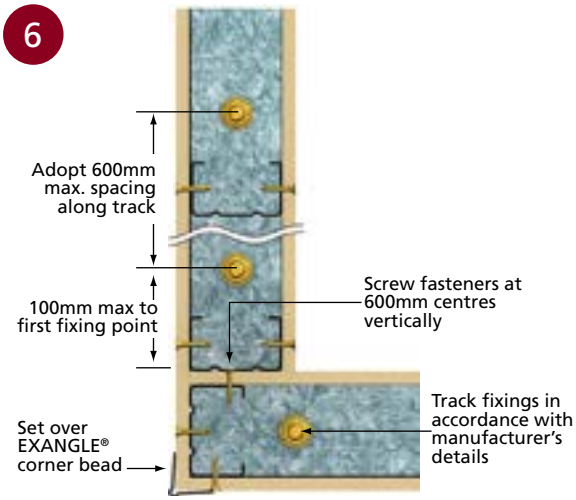

CORNER – SINGLE LAYER APPLICATION

7

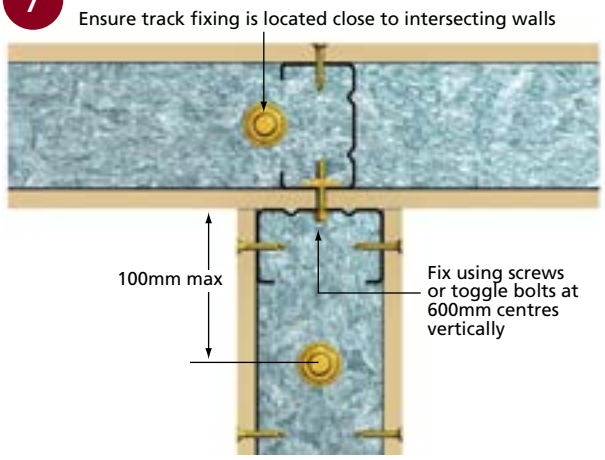

INTERSECTION – SINGLE LAYER APPLICATION

8

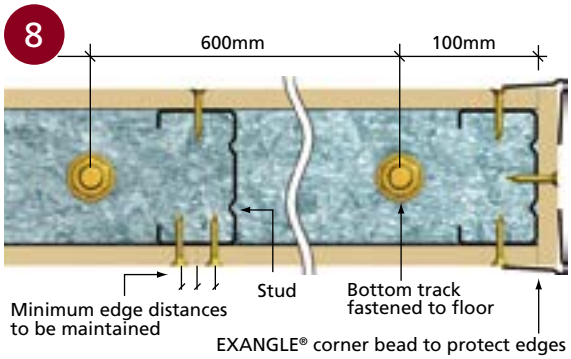

WALL END

9

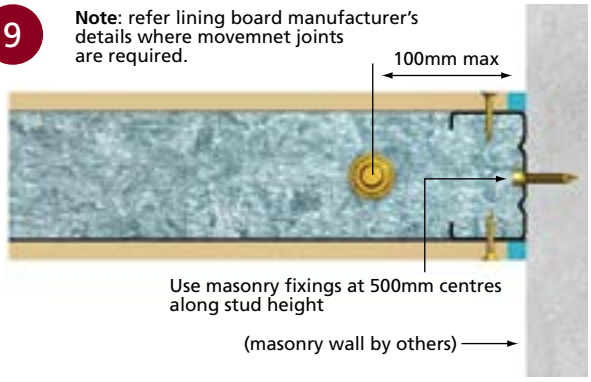

INTERSECTION – MASONRY

10

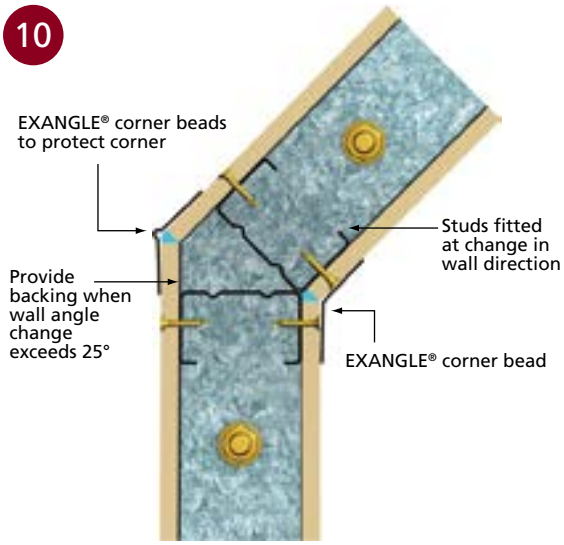

ANGLED WALL

NOTE:
Fixing and finishing of lining boards to be in accordance with manufacturer's recommendations.

INSTALLATION INFORMATION: WALLS (continued)

Wall to Ceiling Junctions

NOTE:

- Wall and ceiling intersection details require specific checking under seismic loads. These details should be checked with your nearest Rondo branch prior to installation.
- Drill point screws are not recommended for sections less than 0.75bmt.

11

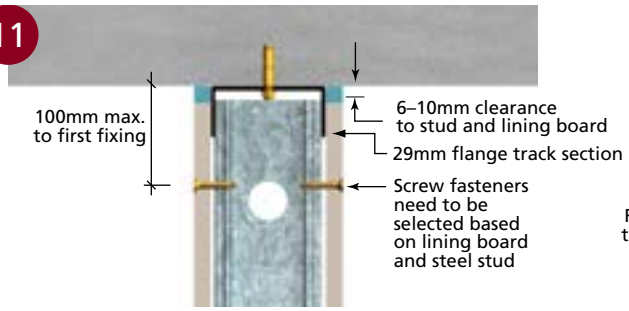

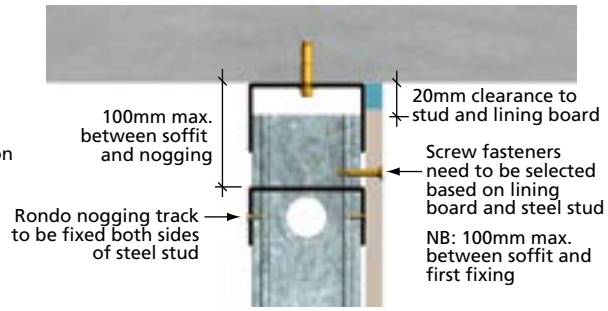

A: CONCRETE SLAB – STUD WALL LINED BOTH SIDES B: CONCRETE SLAB (DEFLECTION HEAD) – STUD WALL LINED ONE SIDE ONLY

12

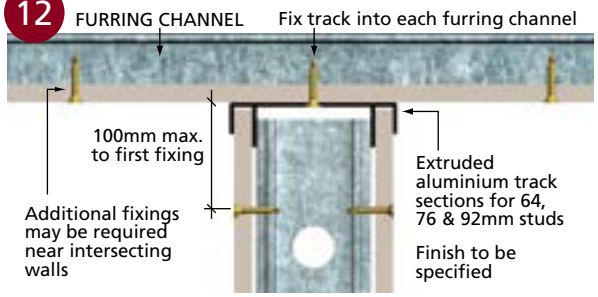

KEY-LOCK® CEILING

13

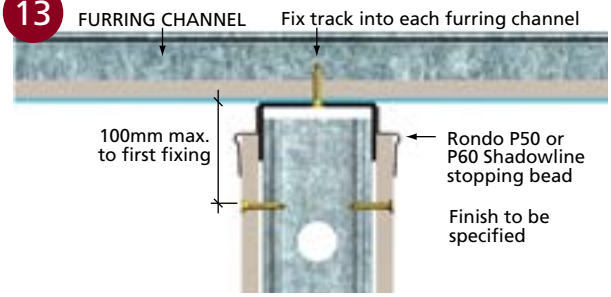

KEY-LOCK® CEILING

14

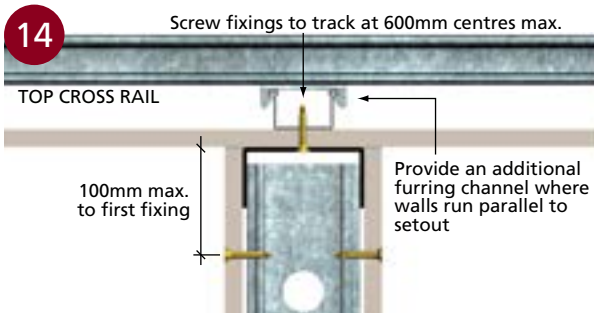

KEY-LOCK® CEILING

15

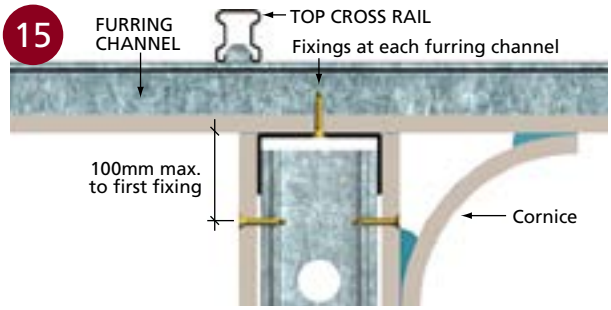

KEY-LOCK® CEILING

16

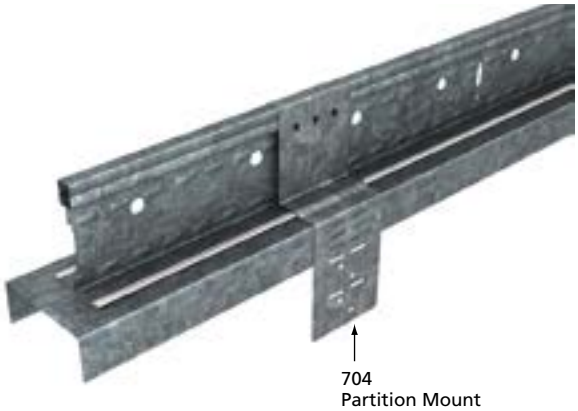

PARTITION MOUNTING DETAILS – DUO® EXPOSED CEILING GRID

Noggings: Steel

Noggings are designed to provide support to the wall studs and prevent twisting of the studs when fitting the lining boards. Noggings should be screwed, or crimped to both flanges of the studs.

Rondo produces a continuous Nogging track *(see Figure 17),* which can be fitted to the stud framing in one length, or individual Noggings may be cut from the track. Nogging track is produced in 0.70bmt to suit all stud framed wall installations, with the exception of 150mm stud framing which is 0.75bmt.

Noggings of 0.70bmt have been checked and approved for use with 1.15bmt studs.

Where services are to be fitted and a recessed Nogging is required this may be cut from stud or track.

Heavy fixtures may be fitted to the wall framing by fabricating custom Nogging.

The minimum number of Noggings required may be determined from Table 2, however it should be noted that in some instances a more economical design may be achieved using more Noggings. Table 2 is applicable for internal partitioning subjected to 0.25kPa service load.

Additional wall Noggings may be required in walls subject to elevated pressures.

17

■ CONTINUOUS NOGGING TRACK

18

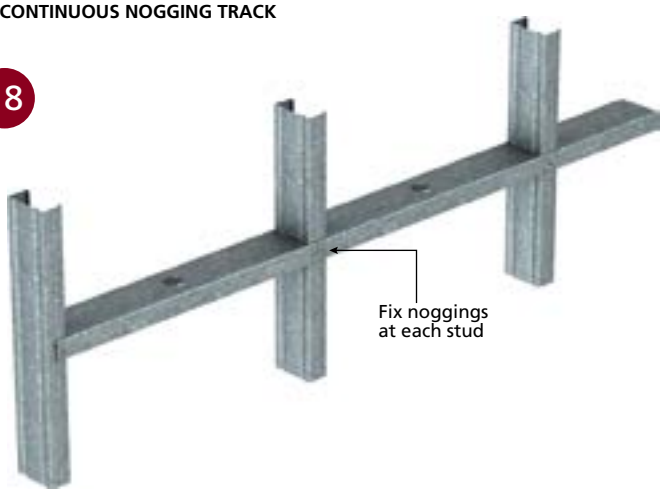

■ NOGGING DETAILS

TABLE 2: MINIMUM NUMBER OF NOGGINGS

WALL HEIGHT (m)	LINING CONDITION	NUMBER OF NOGGINGS
0 – 4.4	Both sides	0
4.4 – 8.8		1
0 – 3	Lined one side	1
3 – 6		2
6 – 8		3
8+		4

NOTE: Walls connected to the underside of a concrete slab must be installed with deflection head track and an additional row of Noggings 100mm down if unlined, or lined one side only. This does not apply if using Rondo Slotted Deflection Head Track (MAXItrack), see page 83.

INSTALLATION INFORMATION: WALLS (continued)

Noggings: Timber

Timber or plywood Noggings are often installed in a steel stud wall to provide support for a variety of additional fittings, such as heavy cupboards, hand rails, flat screen television units etc. Rondo offers a choice of methods to install these Noggings.

Noggings can be fixed between the stud webs and notched out at one end to fit *(see Figure 19 a & b)*. Either screw fixed through the web of the stud (a), or with the addition of a 35 x 35 x 0.70 Rondo steel angle, and similarly, fixed to the stud web if additional support required (b).

Rondo 501 Continuous Nogging Bracket can also be used, which removes the need to notch timber Noggings around the stud flange or sourcing already notched out and cut to size Noggings.

The Nogging bracket is supplied in 2400mm lengths to accommodate a variety of Nogging widths and can be cut to size on site. To install, the bracket is screw fixed to the face of the stud and then screw fix the Nogging to the bracket *(see Figures 20 a & b)*.

As both the Nogging bracket and continuous Nogging track are 0.75bmt thick, it is unlikely that there will be "show-through" problems when the wall is sheeted.

The Nogging bracket is sized to suit the use of 17mm plywood, therefore ensuring a flush finish with the face of the stud. Plywood Noggings can be simply cut on site to suit size requirements.

It should be noted that plywood thickness tolerances can vary depending on the manufacturer. And is important to remember that CCA treated timber should not be used with Rondo steel stud systems.

Reference should be made to a Rondo representative if unsure of the appropriate Nogging to use due to the weight of the fixtures to be supported.

19

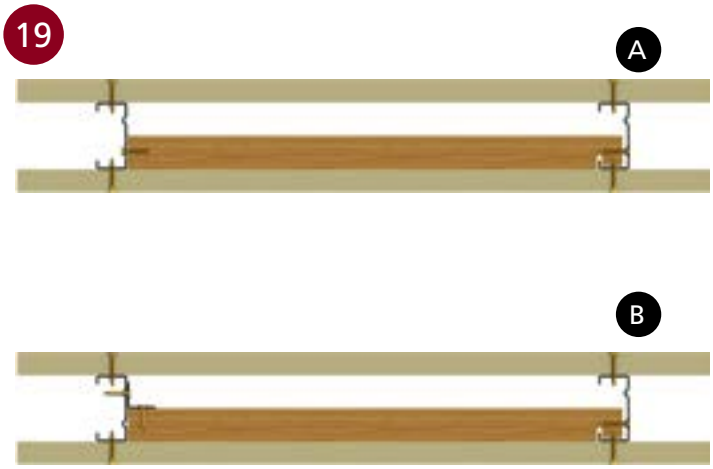

TIMBER NOGGINGS NOTCHED TO FIT BETWEEN STUD WEBS

20

TIMBER NOGGINGS FITTED USING RONDO CONTINUOUS NOGGING BRACKET

Unless specifically checked, framing should not exceed 600mm centres, and in higher wind loads this should be reduced according to the lining board manufacturers specified data.

Sheets may be installed horizontally or vertically with joints in the lining boards being staggered between sides of the framing.

Internal and external corners may be set using a perforated metal corner bead fixed to the linings at not more than 500mm centres. *(Refer to the Finishing Section in this manual for details.)*

Plasterboard may be fixed to studs using 'bugle' head self drilling needle point screws. Cement based sheeting can be fixed using self drilling self embedding head type screws. *(Refer to fastener details on pages* 106–107*).*

The lining boards should be fitted to the framing using adjustable automatic clutch and depth control screw guns. Minimum edge distance to fasteners of 10 to 16mm must be maintained.

CONTROL JOINTS

Control joints are required in long continuous runs of walling, or where there are articulated or construction joints in the primary structure. Control joints should be spaced at not more than 12m centres in continuous plasterboard walls, and 9m in cement based lining material.

Fit the Rondo P35 Control Joint as per Figure 23.

21

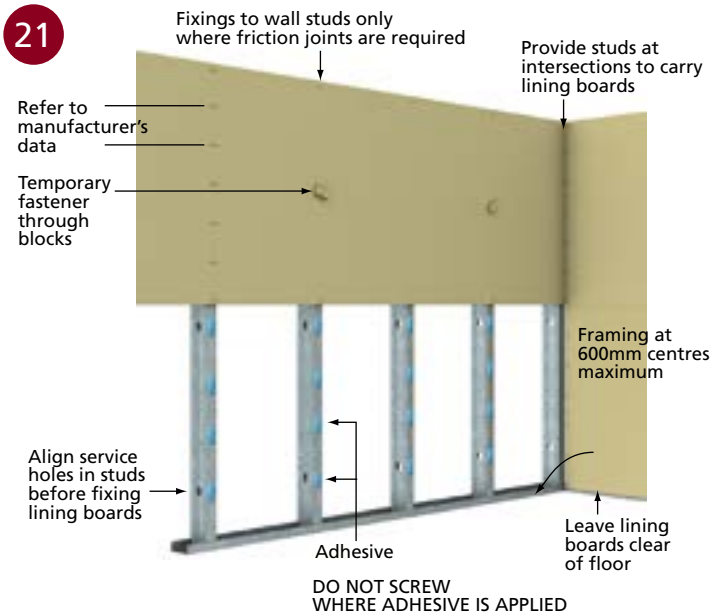

HORIZONTAL APPLICATION

22

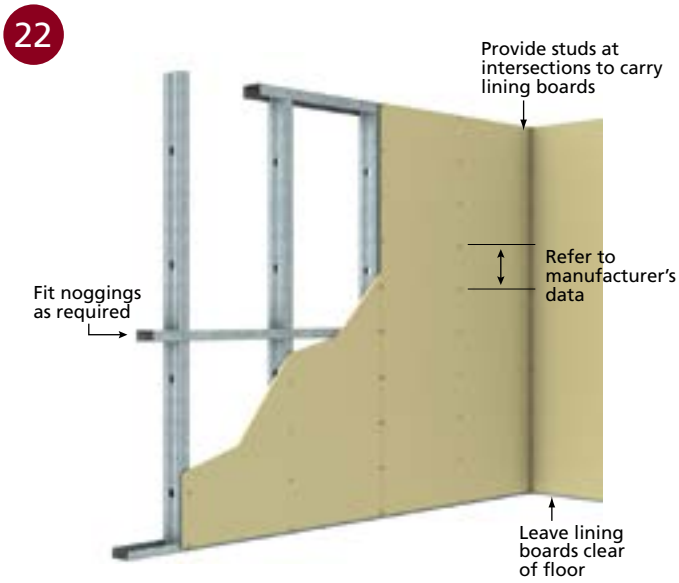

VERTICAL APPLICATION

23

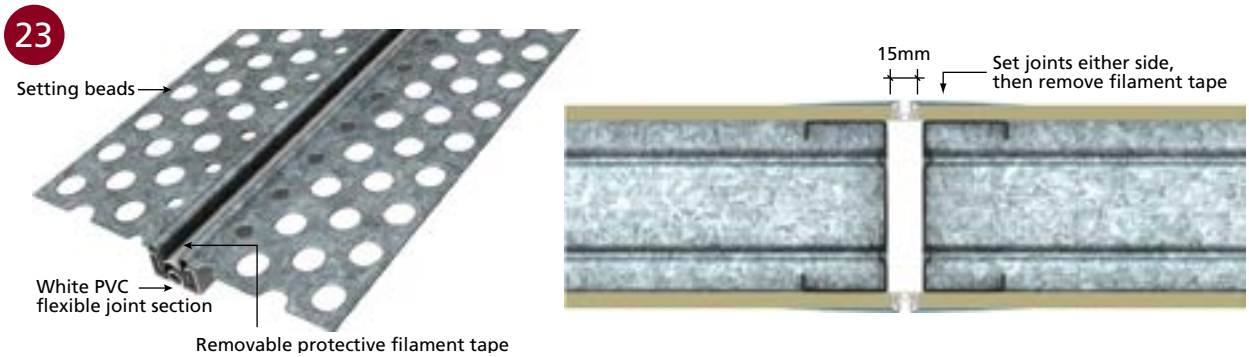

CONTROL JOINTS

INSTALLATION INFORMATION: WALLS (continued)

Staggered Stud System

Staggered Steel Stud Wall Framing Systems are designed to provide effective resistance to sound transmission and acoustic impact when lining boards are attached in various configurations.

Typically, staggered stud walls are constructed using Rondo 64mm x 0.75bmt studs staggered at 300mm centres inside Rondo 92mm x 0.70bmt track. However, please refer to Table 3 for maximum wall heights of other sections.

Studs are held in place using Rondo 126 stud/track holding clips at top and bottom.

For ease of installation, place holding clips at the top and bottom of each stud then slide the studs and clips onto the tracks *(see Figure 24).*

Alternate staggered stud installation methods are shown in Figures 25 & 26.

NOTE:
An alternative acoustic solution to staggered stud wall systems is the Rondo QUIET STUD®. In some cases, the Rondo QUIET STUD® system will achieve similar results to staggered stud wall systems yet is generally much easier to install and will achieve greater wall heights. (Refer to page 99.)

24

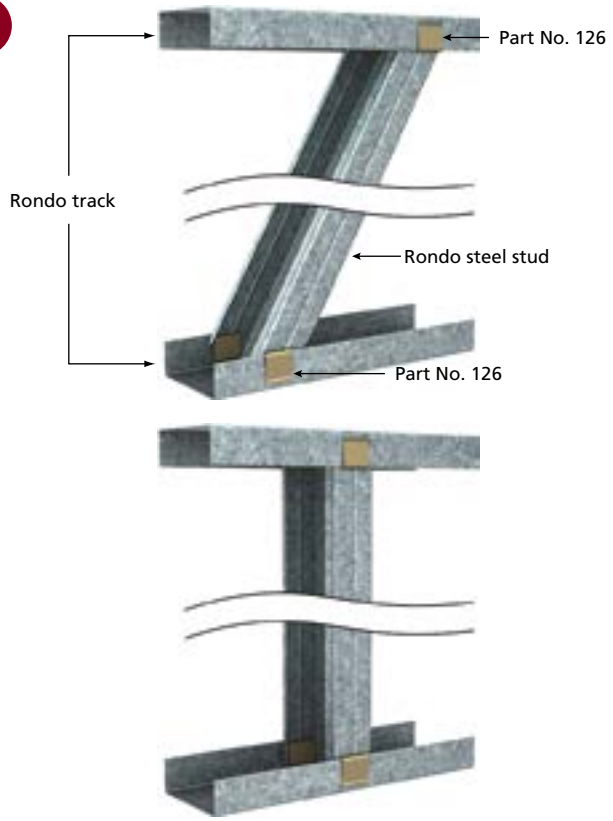

■ INSTALLATION OF STUDS

25

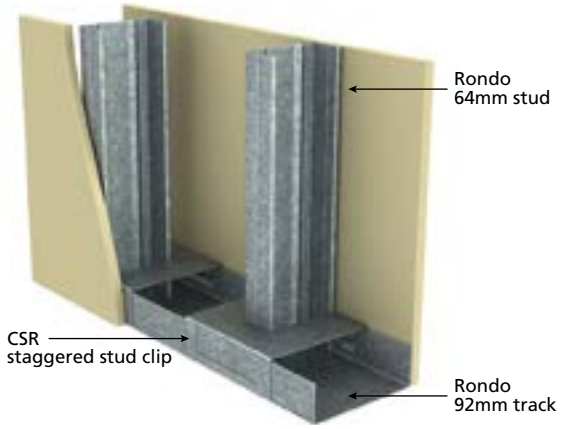

■ CSR GYPROCK STAGGERED STUD METHOD

26

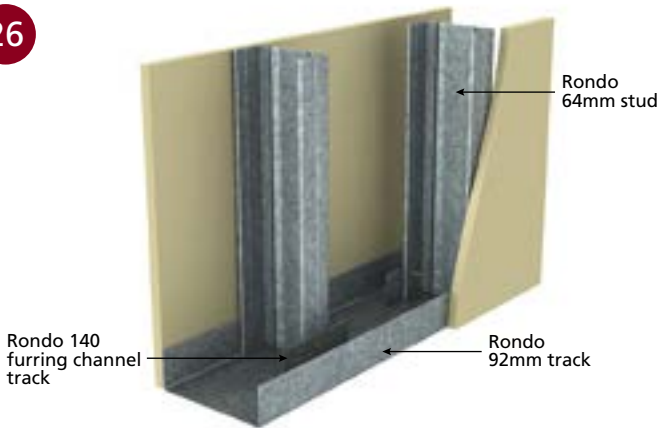

■ BORAL PLASTERBOARD STAGGERED STUD METHOD

TO TOP PAGE

27

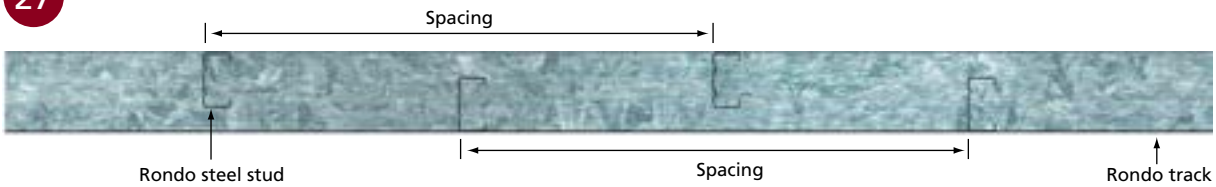

STAGGERED STUD SPACING

TABLE 3: MAXIMUM STAGGERED STUD WALL HEIGHTS – SPAN/240

STUD WIDTH	51mm		64mm			76mm			92mm			150mm	
BMT	**0.50**	**0.75**	**0.50**	**0.75**	**1.15**	**0.55**	**0.75**	**1.15**	**0.55**	**0.75**	**1.15**	**0.75**	**1.15**
PLASTERBOARD LININGS (mm)	**SINGLE STUDS @ 600mm CENTRES**												
1x10mm	2320	2600	2375	2830	3510	2610	3000	3600	2740	3190	3750	3660	4150
1x13mm	2320	2600	2375	2830	3510	2610	3000	3600	2740	3190	3750	3660	4150
1x16mm	2320	2600	2375	2830	3510	2610	3000	3600	2740	3190	3750	3660	4150
PLASTERBOARD LININGS (mm)	**SINGLE STUDS @ 450mm CENTRES**												
1x10mm	2520	2860	2590	3190	3870	2800	3320	4000	2990	3480	4120	3970	4550
1x13mm	2520	2860	2650	3270	3930	2840	3380	4080	3030	3530	4190	4000	4600
1x16mm	2520	2860	2700	3350	3950	2920	3450	4170	3060	3590	4260	4040	4640
PLASTERBOARD LININGS (mm)	**SINGLE STUDS @ 400mm CENTRES**												
1x10mm	2630	2970	2690	3310	4020	2900	3440	4150	3100	3610	4270	4090	4710
1x13mm	2630	2970	2740	3390	4090	2950	3500	4230	3140	3660	4340	4130	4760
1x16mm	2630	2970	2800	3480	4100	3000	3570	4330	3180	3710	4420	4170	4800
PLASTERBOARD LININGS (mm)	**SINGLE STUDS @ 300mm CENTRES**												
1X10MM	2890	3270	2930	3610	4430	3180	3740	4560	3390	3910	4680	4420	5130
1X13MM	2890	3270	2990	3700	4490	3230	3810	4660	3430	3970	4760	4460	5180
1X16MM	2890	3270	3060	3790	4510	3280	3890	4760	3480	4040	4840	4500	5230

NOTES:
1. *Deflection Limit is span/240 to a maximum of 30mm at 0.25 kPa, in accordance with the BCA Specification C1.8 – 2005.*
2. *Maximum wall heights refer to the structural wall heights only. Maximum wall heights may be reduced from those in the table for fire rated walls, refer to your plasterboard manufacturer for this information.*
3. *The tabulated heights are not for axial loads but do include self weight and lateral pressures.*
4. *Shelf loading is not permitted on the tabulated wall heights.*
5. *Loadings: a. Pultimate = 0.375 kPa*
   b. Pservice = 0.25 kPa
6. *These walls are not for external applications.*
7. *All loading in accordance with AS1170:2002.*
8. *Walls analysed in accordance with AS4600:2005.*
9. *No Noggings are used in staggered stud walls.*
10. *BMT = Base Metal Thickness.*
11. *Where single studs are shown in the above table spaced @600mm centres, this means staggering the studs @ every 300mm centres. For single studs shown spaced @400mm centres, this means staggering the studs @ every 200mm centres, etc.*
12. *If proposing to use 126 clips for a staggered stud wall, refer to Rondo Technical Services for advice on maximum wall heights.*

INSTALLATION GUIDE: WALLS

STEP ONE
Set out the track locations in accordance with the floor plans. Ensure internal walls are perpendicular to the external walls, by using the 3 4 5 triangle method.

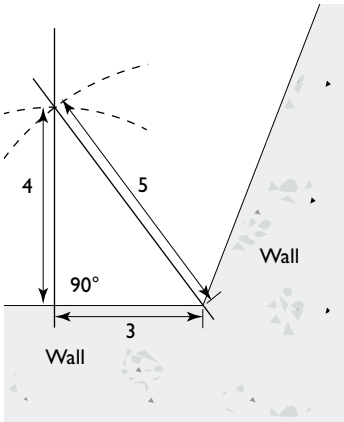

STEP TWO
Secure the top and bottom tracks in position using appropriate fasteners, at not more than 600mm centres. The first fastener should be no more than 100mm from the start or finish of each track or any opening. Deflection head tracks should be used for walls 4.8m and higher.

STEP THREE
Cut the studs to length - for friction fit this is 6mm shorter than the wall height and for deflection heads this is 20mm shorter than the wall height.

STEP FOUR (A)
(Where Noggings are specified)
Refer to Nogging tables for number of Noggings required. If Noggings are required, use Rondo Nogging track with pre-punched holes at nominated centres. Nogging track should be installed with flanges facing the floor.
Fit studs into the pre-punched holes and into both the top and bottom tracks with the service holes starting from the bottom. Then, with a twisting action, rotate the studs into position. Ideally, the studs should be orientated in the same direction to make fitting the lining board easier. Nogging track section should then be lifted to required height and fixed to each steel stud.

STEP FOUR (B)
(Where Noggings are not required)
Fit the stud into both the top and bottom tracks with the service holes starting from the bottom, then with a twisting action rotate the stud into position. Ideally, the studs should be orientated in the same direction to make fitting the lining board easier.

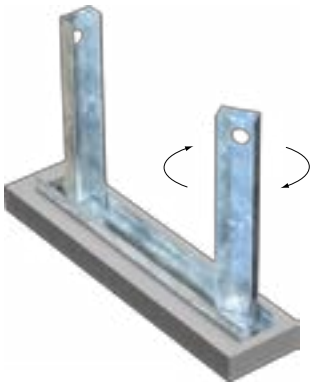

STEP FIVE
Fit the lining board to one side of the wall first. The lining board should be fitted such that the board is screwed to the open side of the stud first. This will prevent any misalignment of the board along the wall.

STEP SIX
Allow the services to be run in the wall cavity.

STEP SEVEN
Line the second side of the wall, using the same method as the first, except that the joints in the lining board should be staggered. This is achieved by starting with a half sheet.

STEP EIGHT
Fit the EXANGLE® corner beads and set the wall joints.

INSTALLATION DETAILS: WALLS

Rondo Web Cleats

There are occasions when it is necessary to allow for higher than standard lateral wall pressures, including both in external wall framing situations and some internal wall systems in high-rise buildings.
In such situations Rondo or the Project Engineer may specify the use of special heavy duty cleats (brackets) to transfer loads at the stud/ track connection to meet the higher load requirement.
Rondo produces two special cleats, 201 and 203, which are both manufactured from 3.0mm G2 steel with a Z275 coating. These cleats are part of the Rondo MAXI-frame® External Wall Framing System but are suitable for use with standard heavy duty stud/track connections.

A: 201 92mm x 3.0mm BASE BRACKET

Connection A shows an installation with 1.15bmt 92 mm Stud and Track using 2 x #10 hex head tek screws per cleat to the stud and a 10mm expanding anchor securing the cleat through the Track into the concrete structure. If installing onto structural steel, a M10 Grade 4.6 Bolt and washer is recommended *(see Figure 28)*.

B: 203 92mm x 3.0mm SLOTTED HEAD BRACKET

Connection B shows an illustration with 1.15bmt 92mm Stud and Deflection Head Track using 2 x #10 hex head tek screws per cleat to the Stud and a 10mm expanding anchor securing the cleat through the Track into the concrete structure *(see Figure 29)*.

NOTE: If securing into structural steel, a slotted head cleat may not be necessary, check with the Project Engineer on the deflection aspects of the structural steel and consult your Rondo Representative.

28

CONNECTION METHOD A

29

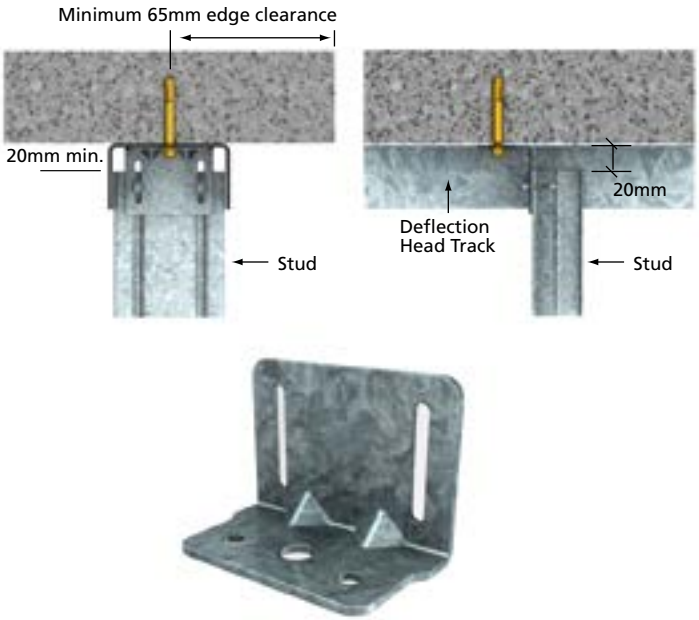

CONNECTION METHOD B

INSTALLATION DETAILS: WALLS (continued)

Curved Walls

When constructing curved walls, stud centres should be reduced to suit the lining board manufacturer's recommendations *(see Table 4).*

Rondo Flexible Tracks at top and bottom should be curved to match the specified radius and fastened to the structure through the holes provided in the web. Each fixing should be as near as possible to the stud point.

Studs must be fixed both sides through the holes provided in both flanges *(refer to Figure 30).*

Care should be taken when tracks span between purlins and in some instances, strengthening may be required.

30

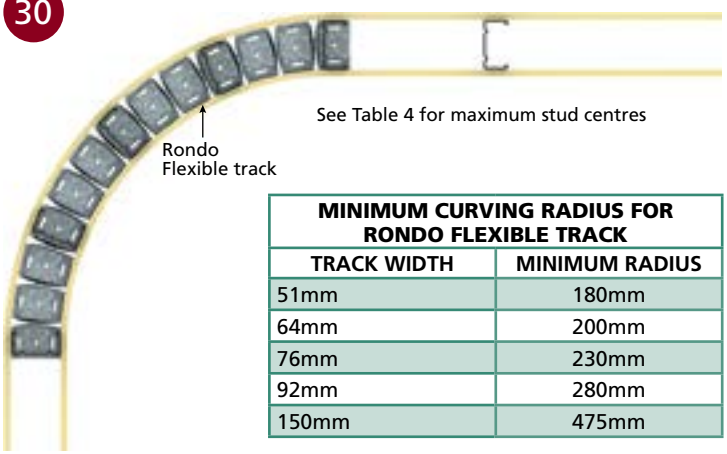

MINIMUM CURVING RADIUS FOR RONDO FLEXIBLE TRACK	
TRACK WIDTH	MINIMUM RADIUS
51mm	180mm
64mm	200mm
76mm	230mm
92mm	280mm
150mm	475mm

FRAMING PREPARATION FOR CURVED WALLS

TABLE 4: STUD CENTRES FOR CURVED WALLS

LINING BOARD THICKNESS (mm)	**RADIUS** (mm)						
	900–1000	**1000–1500**	**1500–2000**	**2000–2500**	**2500–3000**	**3000–4000**	**4000+**
	MAXIMUM STUD CENTRES (mm)						
6.0 – 6.5	150	200	250	300	350	450	550
10	150	200	250	300	350	400	500
13	–	150	200	250	300	400	500
16	–	–	–	–	–	250	350

Bridged Chase Walls

Chase walls are required where it is necessary to accommodate large bore pipes, air conditioning ducts or similar services.

The walls are constructed using two parallel runs of stud and track, which can then be cross braced at regular intervals.

The cross bracing may be either plasterboard, stud or track section *(refer to Figure 31 for details).*

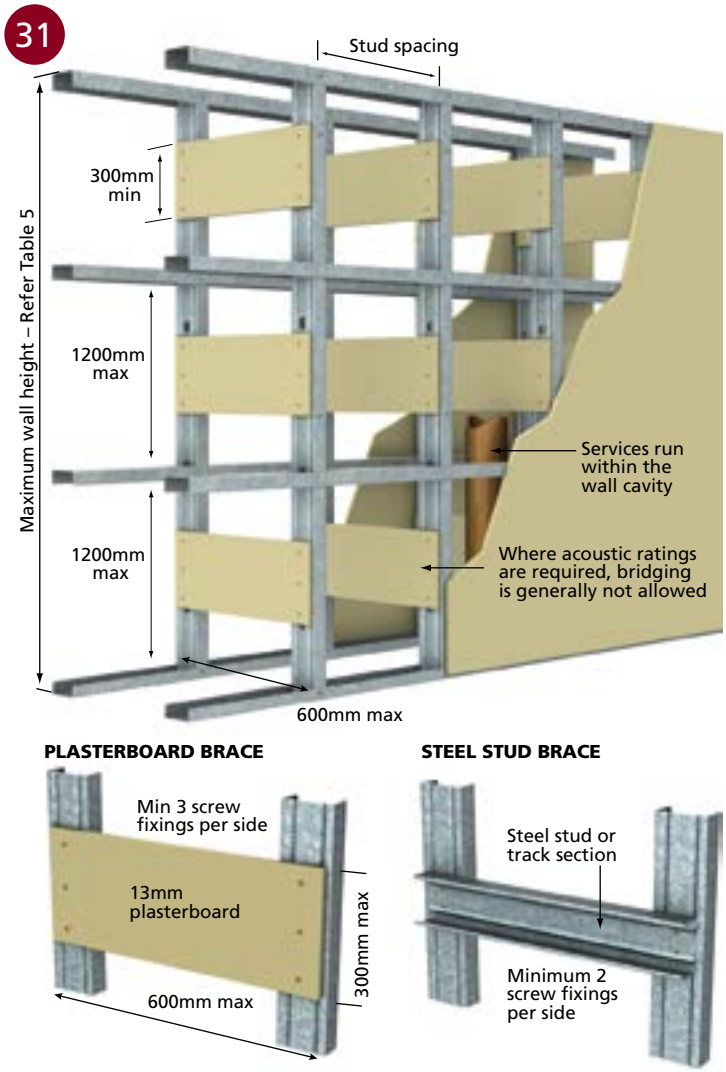

CHASE WALL: BRIDGED

TABLE 5: LIMITING HEIGHT: BRIDGED CHASE WALLS

STUD WIDTH (mm)	GAUGE (mm)	SPACING (mm)	MAXIMUM WALL HEIGHT		NO. OF NOGGINGS
			H/240	H/360	
64	0.50	600	3390	2960	2
		450	3730	3260	2
		400	3870	3380	2
76	0.55	600	4210	3790	2
		450	4645	4145	2
		400	4820	4290	2
92	0.55	600	4655	4230	2
		450	5120	4665	2
		400	5270	4840	2

NOTES:
1. *Bridging to be installed in accordance with Figure 31.*
2. *Linings assumed to 1 x 13mm plasterboard minimum.*
3. *Noggings to be equally spaced over wall height.*
4. *Deflection limited to either H / 240 or H / 360 at 0.25kPa, in accordance with the BCA Specification C1.8.*
5. *Strength (ultimate) checked at 0.375kPa static pressure.*

TO TOP PAGE

INSTALLATION DETAILS: WALLS (continued)

Acoustic Chase Walls

Where chase walls are constructed for acoustic purposes no cross bracing between the walls is permitted. These walls use in-plane Noggings for rigidity, and the wall heights are significantly lower.

The maximum wall heights may be determined from the wall heights given in Tables 6 & 7 (refer walls lined one side only).

The number of Noggings required may be determined from the table shown below.

This type of wall construction is also known as 'discontinuous construction' *(see Figure 32)*.

32

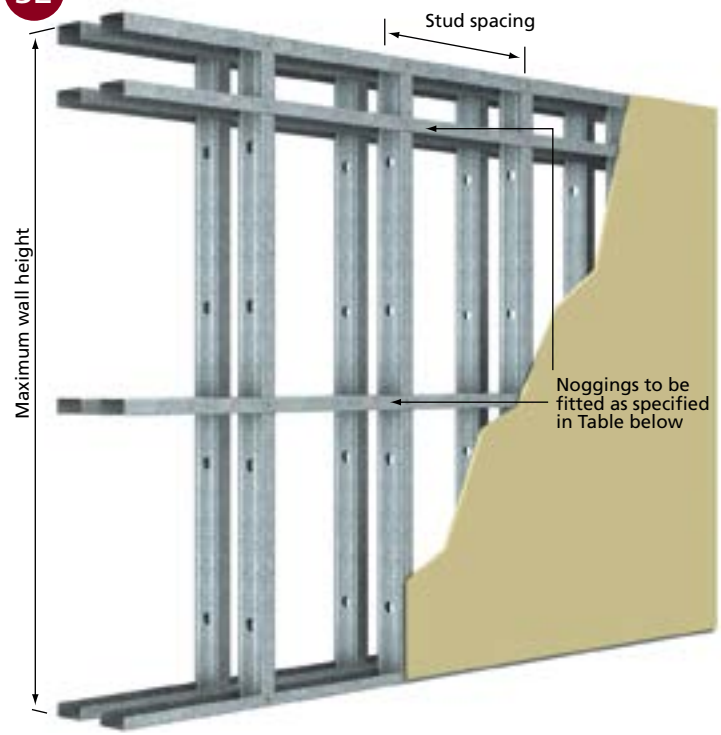

CHASE WALL: UNBRIDGED ACOUSTIC WALL

Minimum Number of Noggings: Acoustic Chase Wall

WALL HEIGHT (m)	LINING CONDITION	NO.OF NOGGINGS
0 – 3	Lined one side	1
3 – 6		2
6 – 8		3
8+		4

NOTE: Walls connected to the underside of a concrete slab must be installed with deflection head track and an additional row of Noggings 100mm down if unlined, or lined one side only.

Window & Door Framing

Window and door framing require special detailing to prevent long term serviceability problems. This detailing is in the form of additional fixings and framing members which carry the extra loadings in these areas.

Typically, track sections can be cut and fabricated to frame window and door openings. For internal partitioning, the standard details as shown in Figure 33 would be acceptable for window openings up to 1500mm and standard door openings. Configurations outside of these limits, and external wall framing, should be checked prior to commencement of work.

Studs adjacent to window and door openings should be boxed and screw fastened to the wall tracks and should be taken through to the structural soffit.

Allow approximately 100mm each end of the track to facilitate a suitable connection. Studs, cut to length, should be fitted above and below the window openings and above the door openings.

The stud spacing of the short studs should match the standard wall stud spacing.

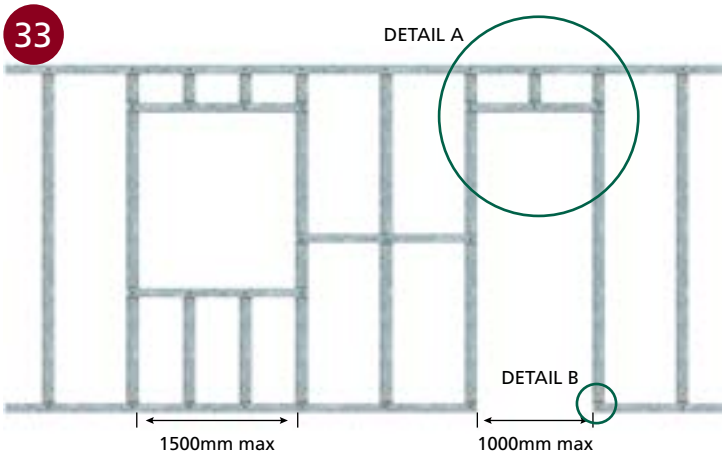

■ INTERNAL WALL FRAMING

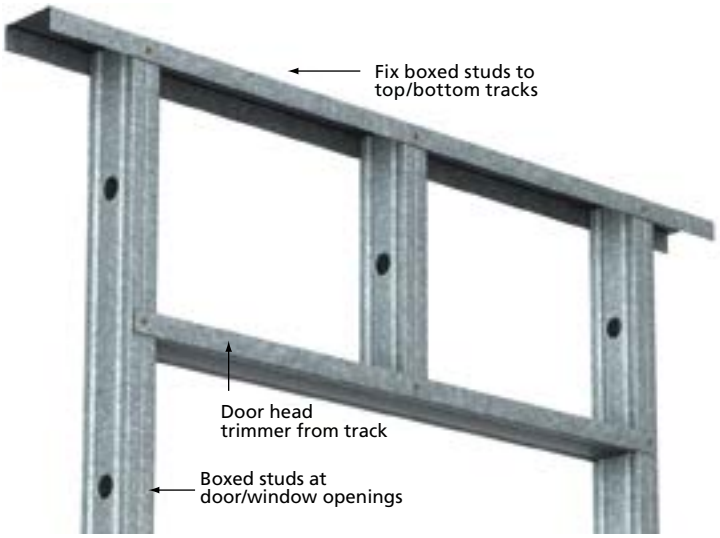

■ DETAIL A: DOOR/WINDOW HEAD DETAIL

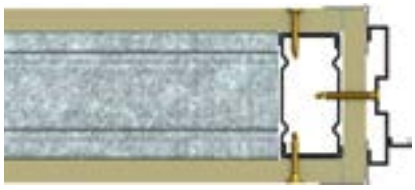

■ DETAIL B: EXTRUDED ALUMINIUM DOOR JAMB PROFILE

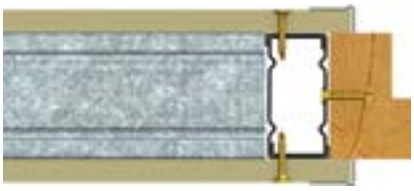

■ DETAIL B: TIMBER DOOR JAMB WITH STOPPING BEAD TO LINING BOARD

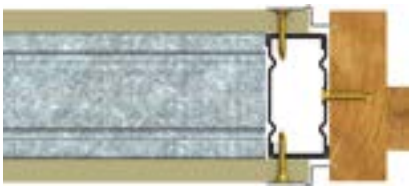

■ DETAIL B: TIMBER DOOR JAMB WITH SHADOWLINE DETAIL

INSTALLATION DETAILS: WALLS (continued)

Plumbing/Electrical Services

Copper or brass piping and fittings should be isolated from direct contact with the steel framing. This can be achieved by insulating the piping with neoprene sheeting or tape, or by lagging the pipe. Where the piping is run through the service holes of the studs, plastic grommets should be used to isolate the pipe, and prevent water hammer.

Similar care, in isolating the framing, should be taken when contact with dissimilar metals is possible – typically where lead flashing is used in the construction.

Electrical services can be run through the service holes of the 0.50, 0.55 and 0.75bmt studs without requiring grommets, due to the unique flaring of the service holes. Grommets should be used for 1.15bmt studs or greater as service holes are punched and do not have any flaring around the holes.

Generally, services are run through the pre-punched service holes. In brick veneer construction, services may be run through the wall cavity, and fixed to the flanges of the studs, using appropriate saddle clamps.

DRILLING

Where extra service holes are required they may be positioned using a hole saw or similar, and grommets should be fitted. Additional service holes should be positioned as close as practical to the centreline of the stud *(refer Figure 35).* NOTE: The maximum hole diameter should not exceed 50mm for a 92mm stud without checking.

NOTCHING

Notching of the studs should not exceed 35mm under any circumstances.

Notching of the studs should be in accordance with the details shown in Figure 36.

34

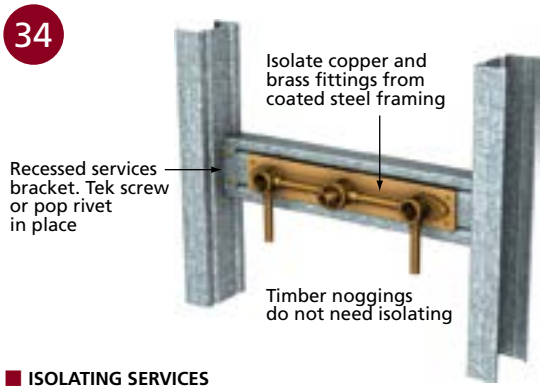

■ ISOLATING SERVICES

35

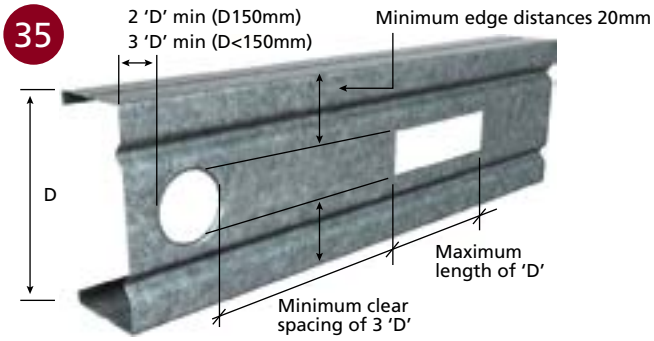

■ HOLE DRILLING

36

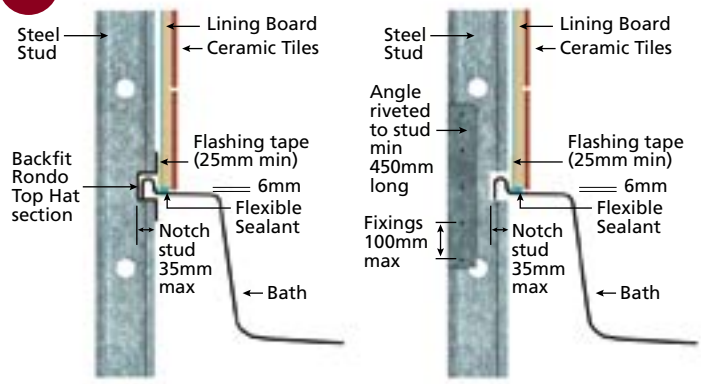

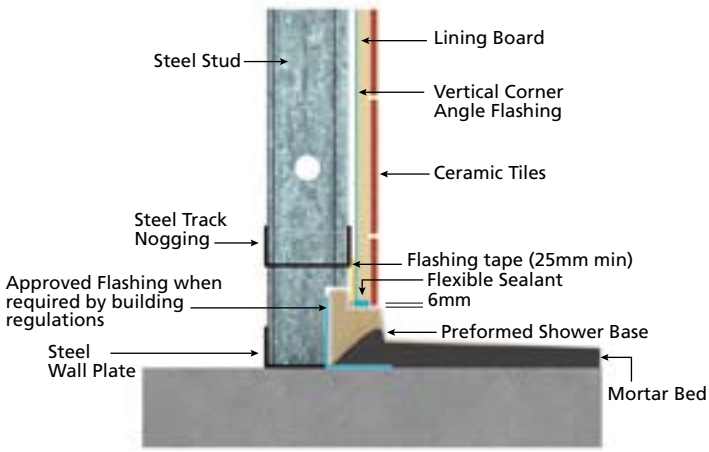

■ NOTCHING

TO TOP PAGE

MAXIMUM WALL HEIGHTS

TABLE 6: INTERNAL NON-LOAD BEARING WALLS – L/240 PLASTERBOARD INCLUDING FIRE RATED

STUD WIDTH		51mm		64mm			76mm			92mm			150mm	
BMT		0.50	0.75	0.50	0.75	1.15	0.55	0.75	1.15	0.55	0.75	1.15	0.75	1.15
PLASTERBOARD LININGS (mm)		**SINGLE STUDS @ 600mm CENTRES**												
LINED BOTH SIDES	1x10mm	2770	2910	3330	3930	4170	3700	4430	4650	4540	4830	5110	6550	7220
	1x13mm	3200	3320	3720	4220	4430	4130	5020	5220	4940	5500	5750	6990	7540
	1x16mm	3380	3520	3910	4350	4520	4300	5250	5420	5180	5710	5920	7190	7650
LINED ONE SIDE	1x10mm	2320	2600	2720	3130	3530	3200	3580	4050	3610	4130	4690	5330	6810
	1x13mm	2320	2600	2720	3250	3580	3240	3820	4050	3610	4180	4690	5370	6810
	1x16mm	2320	2600	2750	3280	3590	3250	3870	4050	3610	4200	4690	5370	6810
PLASTERBOARD LININGS (mm)		**SINGLE STUDS @ 450mm CENTRES**												
LINED BOTH SIDES	1x10mm	3020	3200	3580	4180	4460	4020	4780	5070	4850	5270	5620	7140	7750
	1x13mm	3420	3570	3930	4430	4690	4410	5330	5570	5210	5890	6190	7520	8040
	1x16mm	3550	3710	4130	4600	4820	4580	5580	5790	5450	6120	6390	7620	8130
LINED ONE SIDE	1x10mm	2520	2860	2930	3410	3870	3500	3910	4450	4050	4520	5150	6510	7400
	1x13mm	2520	2860	2930	3530	3930	3580	4170	4450	4050	4610	5150	6510	7400
	1x16mm	2520	2860	3020	3560	3950	3600	4220	4450	4050	4630	5150	6510	7400
PLASTERBOARD LININGS (mm)		**SINGLE STUDS @ 400mm CENTRES**												
LINED BOTH SIDES	1x10mm	3130	3320	3690	4280	4590	4160	4930	5240	4990	5460	5840	7340	7970
	1x13mm	3510	3680	4020	4530	4810	4530	5450	5720	5330	6050	6380	7610	8190
	1x16mm	3620	3750	4220	4710	4950	4700	5710	5950	5560	6280	6580	7750	8300
LINED ONE SIDE	1x10mm	2630	2970	3070	3540	4020	3640	4070	4620	4210	4700	5360	6740	7650
	1x13mm	2630	2970	3070	3660	4090	3740	4320	4620	4210	4800	5360	6740	7650
	1x16mm	2630	2970	3140	3700	4100	3760	4380	4620	4210	4820	5360	6740	7650
PLASTERBOARD LININGS (mm)		**SINGLE STUDS @ 300mm CENTRES**												
LINED BOTH SIDES	1x10mm	3390	3620	3960	4570	4930	4510	5310	5690	5340	5930	6390	7840	8570
	1x13mm	3730	3940	4260	4780	5120	4830	5770	6110	5640	6450	6860	8110	8740
	1x16mm	3800	4020	4450	4980	5270	5010	6030	6330	5860	6690	7070	8230	8850
LINED ONE SIDE	1x10mm	2890	3270	3380	3900	4430	4010	4480	5090	4630	5180	5900	7350	8290
	1x13mm	2890	3270	3380	4010	4490	4130	4730	5090	4640	5290	5920	7350	8290
	1x16mm	2890	3270	3460	4050	4510	4150	4790	5090	4640	5310	5930	7350	8290

NOTES:

1. *Deflection Limit is span/240 (or span/360 as applicable) to a maximum of 30mm at 0.25 kPa, in accordance with the BCA Specification C1.8 – 2005.*
2. *Maximum wall heights refer to the structural wall heights only. Maximum wall heights may be reduced from those in the table for fire rated walls, refer to your plasterboard manufacturer for this information.*
3. *The tabulated heights are not for axial loads but do include self weight and lateral pressures.*
4. *Shelf loading is not permitted on the tabulated wall heights.*
5. *Loadings: a. Pultimate = 0.375 kPa*
   b. Pservice = 0.25 kPa
6. *These walls are not for external applications.*
7. *All loading in accordance with AS1170:2002.*
8. *Walls analysed in accordance with AS4600:2005.*
9. *Noggings in accordance with table shown on facing page.*
10. *BMT = Base Metal Thickness.*
11. *The above wall heights are suitable for up to two layers of the nominated thickness.*
12. *See table on Page 100 for Nogging requirement.*
13. *Table assumes the same or like gauge is used for both Stud and Track sections. The above wall heights may change if using dissimilar gauge product*

TO TOP PAGE

TABLE 7: INTERNAL NON-LOAD BEARING WALLS – L/360 BRITTLE SUBSTRATES – CFC etc.

STUD WIDTH		51mm		64mm			76mm			92mm			150mm	
BMT		0.50	0.75	0.50	0.75	1.15	0.55	0.75	1.15	0.55	0.75	1.15	0.75	1.15
PLASTERBOARD LININGS (mm)		**SINGLE STUDS @ 600mm CENTRES**												
LINED BOTH SIDES	1x10mm	2540	2660	2990	3480	3680	3340	4010	4210	4030	4410	4650	5830	6420
	1x13mm	2900	3010	3320	3720	3900	3700	4510	4680	4370	4970	5180	6190	6740
	1x16mm	3000	3120	3500	3890	4040	3870	4740	4890	4590	5190	5370	6380	6890
LINED ONE SIDE	1x10mm	2000	2270	2340	2700	3070	2780	3100	3530	3210	3590	4090	5260	6030
	1x13mm	2000	2270	2340	2850	3160	2930	3400	3530	3240	3730	4130	5260	6030
	1x16mm	2000	2270	2450	2890	3180	2960	3460	3530	3250	3760	4150	5260	6030
PLASTERBOARD LININGS (mm)		**SINGLE STUDS @ 450mm CENTRES**												
LINED BOTH SIDES	1x10mm	2740	2890	3190	3680	3930	3600	4300	4550	4290	4770	5070	6320	7000
	1x13mm	3070	3210	3490	3900	4120	3920	4750	4970	4590	5270	5540	6630	7270
	1x16mm	3130	3280	3670	4090	4280	4100	5000	5180	4810	5510	5740	6810	7410
LINED ONE SIDE	1x10mm	2210	2500	2580	2980	3380	3060	3420	3880	3540	3950	4500	5790	6630
	1x13mm	2210	2500	2580	3110	3470	3220	3700	3880	3610	4100	4570	5790	6630
	1x16mm	2210	2500	2690	3150	3490	3260	3770	3880	3620	4130	4580	5790	6630
PLASTERBOARD LININGS (mm)		**SINGLE STUDS @ 400mm CENTRES**												
LINED BOTH SIDES	1x10mm	2820	2990	3280	3770	4040	3720	4420	4690	4400	4920	5250	6530	7260
	1x13mm	3140	3290	3560	3980	4220	4020	4850	5090	4690	5400	5700	6820	7510
	1x16mm	3190	3350	3750	4180	4380	4190	5100	5310	4900	5640	5900	6990	7650
LINED ONE SIDE	1x10mm	2290	2600	2680	3090	3510	3180	3550	4040	3680	4110	4680	6020	6900
	1x13mm	2290	2600	2680	3230	3600	3350	3840	4040	3760	4260	4750	6020	6900
	1x16mm	2290	2600	2800	3270	3620	3390	3900	4040	3780	4290	4770	6020	6900
PLASTERBOARD LININGS (mm)		**SINGLE STUDS @ 300mm CENTRES**												
LINED BOTH SIDES	1x10mm	3030	3240	3510	4010	4330	4000	4720	5050	4700	5300	5700	7090	7920
	1x13mm	3320	3510	3760	4200	4490	4270	5110	5410	4960	5730	6090	7330	8130
	1x16mm	3340	3540	3940	4400	4660	4440	5360	5620	5160	5960	6290	7490	8260
LINED ONE SIDE	1x10mm	2520	2860	2950	3410	3870	3500	3910	4450	4050	4520	5150	6630	7590
	1x13mm	2520	2860	2950	3530	3950	3670	4180	4450	4150	4670	5230	6630	7590
	1x16mm	2520	2860	3070	3570	3970	3710	4240	4450	4180	4710	5250	6630	7590

MINIMUM NUMBER OF NOGGINGS

WALL HEIGHT (m)	LINING CONDITION	NUMBER OF NOGGINGS
0 – 4.4	Both sides	0
4.4 – 8.8		1
0 – 3.0	Lined one side	1
3.0 – 6.0		2
6.0 – 8.0		3
8.0+		4

NOTE: Walls connected to the underside of a concrete slab must be installed with deflection head track and an additional row of Noggings 100mm down if unlined, or lined one side only.

SHELF LOAD TABLES

Permissible Shelf Loadings for Steel Stud Walls

TABLE 6: MAXIMUM ALLOWABLE LOADS

(2400mm – 3600mm wall height. Walls lined both sides with 1x13mm plasterboard)

MAXIMUM ALLOWABLE LOAD IN KG PER METRE RUN OF SHELF (for fasteners designed by structural engineer)																
WALL HEIGHT (mm)		**2400**			**2700**			**3000**			**3300**			**3600**		
STUD SIZE		**64 x 0.50 BMT**			**64 x 0.50 BMT**			**76 x 0.55 BMT**			**76 x 0.55 BMT**			**92 x 0.55 BMT**		
SHELF WIDTH (mm)		**200**	**300**	**400**	**200**	**300**	**400**	**200**	**300**	**400**	**200**	**300**	**400**	**200**	**300**	**400**
Number of shelves equally spaced over full height	1	127	95	77	58	43	33	140	107	87	62	45	38	73	57	47
	2	102	80	65	58	43	33	120	93	77	58	45	38	73	57	47
	3	63	47	38	28	22	17	70	53	43	30	23	18	37	28	23
	4	53	40	33	27	20	17	60	47	38	30	23	18	35	27	22
	5	42	32	25	18	13	12	47	35	28	20	15	12	23	18	15
	6	37	27	22	17	13	10	42	32	25	18	15	12	23	18	15
LOAD MULTIPLICATION FACTOR FOR ALTERNATIVE STUD SIZES																
64 x 0.75 BMT		1.75	1.75	1.75	1.75	1.75	1.75	1.20	1.20	1.20	1.20	1.20	1.20	—	—	—
76 x 0.55 BMT		1.40	1.40	1.40	1.40	1.40	1.40	1.00	1.00	1.00	1.00	1.00	1.00	—	—	—
76 x 0.75 BMT		2.20	2.20	2.20	2.20	2.20	2.20	1.55	1.55	1.55	1.55	1.55	1.55	—	—	—
92 x 0.55 BMT		1.60	1.60	1.60	1.65	1.65	1.65	1.15	1.15	1.15	1.15	1.15	1.15	1.00	1.00	1.00
92 x 0.75 BMT		2.75	2.75	2.75	2.80	2.80	2.80	1.95	1.95	1.95	1.95	1.95	1.95	1.65	1.65	1.65

TABLE 7: MAXIMUM ALLOWABLE LOADS (4200mm – 6000mm wall height)

MAXIMUM ALLOWABLE LOAD IN KG PER METRE RUN OF SHELF (for fasteners designed by structural engineer)													
WALL HEIGHT (mm)		**4200**			**4800**			**5400**			**6000**		
STUD SIZE		**150 x 0.75 BMT**			**150 x 0.75 BMT**			**150 x 0.75 BMT**			**150 x 1.15 BMT**		
SHELF WIDTH (mm)		**200**	**300**	**400**	**200**	**300**	**400**	**200**	**300**	**400**	**200**	**300**	**400**
Number of shelves equally spaced over bottom 3600mm as shown	1	658	550	483	500	433	367	367	300	233	383	283	217
	2	375	325	283	267	233	200	183	158	133	200	150	117
	3	283	242	217	183	167	150	125	108	92	133	100	82
	4	225	200	175	158	133	117	100	83	72	100	78	63
	5	192	158	142	125	108	100	82	72	57	83	63	52
	6	158	133	123	108	100	83	70	62	47	72	53	43

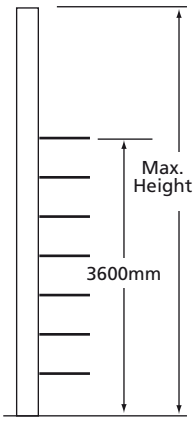

DESIGN ASSUMPTIONS:

1. *Stud spacing = 600mm*
2. *Deflection checked to the lesser of H/480 under shelf loads (G) or H/360 under shelf loads with combined internal pressure (G + Ws)*
3. *Internal pressure checked at 0.375kPa (Wu) ultimate and 0.25kPa (Ws) service*
4. *Walls are lined both sides with 13mm plasterboard*
5. *Studs are continuous in length and no splicing is allowed*
6. *All calculations are based on Rondo sections*
7. *Shelving is attached to one side of the wall only*
8. *BMT = Base Metal Thickness*
9. *To obtain kg per stud per shelf, multiply the values in the above table by 0.6*

SHELF LOAD TABLES (continued)

Non-Fire Rated Steel Stud Systems

37

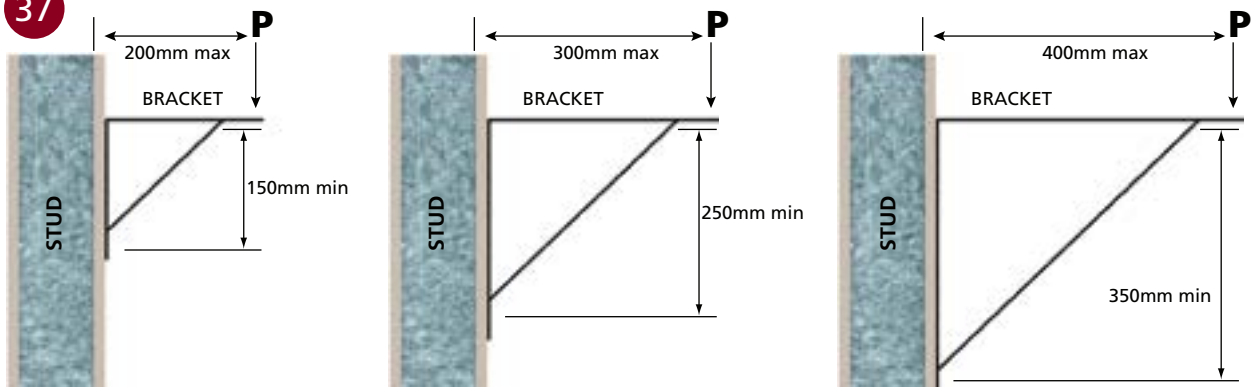

TYPE 1 **TYPE 2** **TYPE 3**

■ **BRACKETS**

38

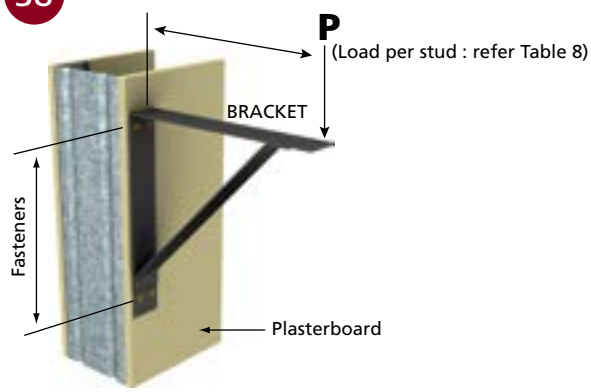

■ **FASTENERS**

TABLE 8: MAXIMUM LOADINGS FOR BRACKETS

STUD GAUGE (BMT)	MAXIMUM LOADING 'P' PER STUD (KG) (where fasteners consist of 2# 10 gauge fasteners at each location)		
	TYPE 1 BRACKET	TYPE 2 BRACKET	TYPE 3 BRACKET
0.50	25	30	33
0.55	27	33	36
0.75	36	44	49
1.15	57	70	76

NOTES: 1. Fixings shown in Figure 3 consist of 2# 10 gauge fasteners at each fixing location
2. Design is for bracket connection only – bracket and shelf design by others
3. Loads greater than those listed above must be independently designed for
4. Fasteners used must be 10 gauge and have the properties listed in Table 15

TABLE 9: FASTENER PROPERTIES (10 GAUGE)

STUD GAUGE BMT (mm)	PULLOUT FORCE kN ($Ø N_{ou}$)	SHEAR STRENGTH KN ($Ø V_b$)
0.50	0.34	0.54
0.55	0.37	0.62
0.75	0.50	0.99
1.15	0.77	1.87

NOTE: Pullout and shear capacity based on Grade 300 steel brackets of minimum thickness 1.50mm

SECTION PROPERTIES

Lipped Studs

MATERIAL SPECIFICATIONS

Steel Grade: G2 Z275 to AS1397
Yield Strength: Fy – 270 MPa
Coating Grade: Z275 – 275g/m² zinc
Ultimate: Fu = 330 MPa

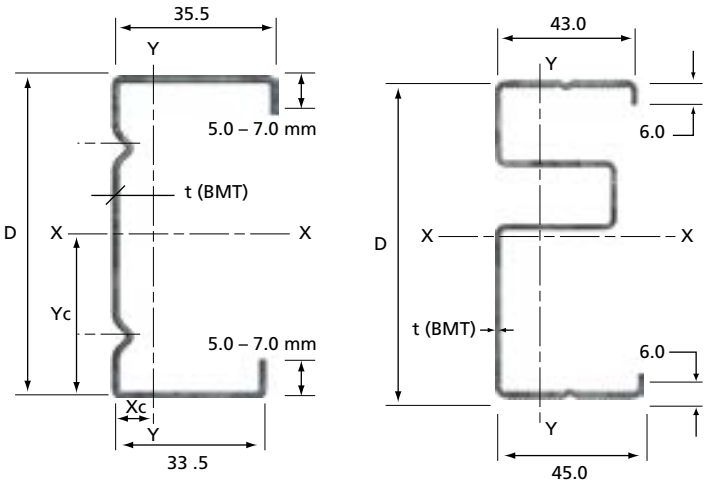

WALL STUD **QUIET STUD**

TABLE 12: SECTION PROPERTIES FOR LIPPED STUDS

BMT	PART NO	DIMENSIONS				GROSS AREA	MOMENT OF AREA		SECTION MODULUS		TORSION Constant	WARPING Constant
		D mm	t mm	Xc mm	Yc mm	mm²	Ixx 10^3 mm⁴	Iyy 10^3 mm⁴	Zxx mm³	Zyy mm³	J mm⁴	Iw mm⁶
0.50	401	50.8	0.50	12.0	26.3	64.1	29.1	9.88	1148	428	5.35	5.23E6
	112	63.5	0.50	10.3	33.1	70.5	47.6	10.3	1493	422	5.96	7.78E6
0.55	403	76.2	0.55	9.40	39.5	84.7	79.4	12.0	2076	475	8.64	12.78E6
	251	92.1	0.55	8.60	47.5	93.3	123.1	12.7	2662	486	9.52	19.55E6
0.75	489	50.8	0.75	11.1	26.8	94.6	42.3	13.9	1659	582	18.07	6.62E6
	491	63.5	0.75	10.4	30.7	108.0	72.3	15.9	2281	656	20.24	12.22E6
	493	76.2	0.75	9.50	37.2	117.0	109.0	16.5	2872	650	21.93	17.75E6
	495	92.1	0.75	8.60	45.1	129.0	168.9	17.5	3685	667	24.18	27.26E6
	511	150.0	0.75	6.50	74.1	167.6	533.4	19.9	7144	701	32.28	82.56E6
1.15	661	63.5	1.15	10.5	31.2	154.9	102.7	23.5	3239	972	70.47	16.2E6
	671	76.2	1.15	9.60	37.5	169.5	157.1	25.0	4121	997	76.91	24.67E6
	681	92.1	1.15	8.70	45.4	187.8	245.2	26.5	5315	1021	84.97	38.35E6
	691	150.0	1.15	6.50	74.2	254.5	788.9	30.3	10490	1073	114.3	120.4E6
RONDO QUIET STUD®												
0.55	RQST	92.0	0.55	16.5	48.9	139.2	149.8	30.6	3067	1097	14.1	59.8E6

NOTE: Section properties are approximate only and may be subject to revision

SECTION PROPERTIES (continued)

Wall Stud Track

MATERIAL SPECIFICATIONS

Steel Grade: G2 Z275 to AS1397
Yield Strength: Fy – 270 MPa
Coating Grade: Z275 – 275g/m² zinc
Ultimate: Fu = 330 MPa

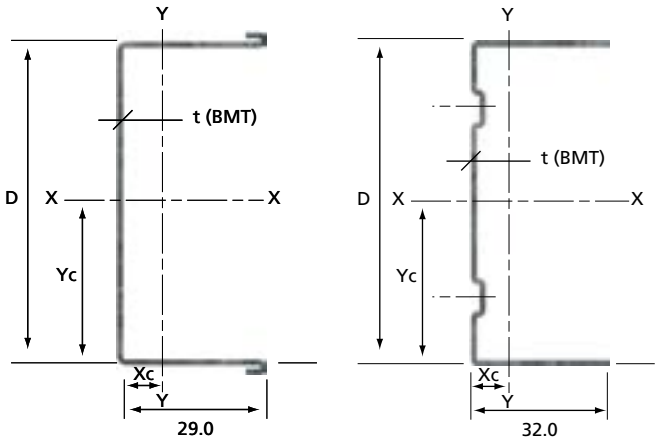

0.50/0.70 BMT HEMMED **0.75/1.15 BMT**

TABLE 13: SECTION PROPERTIES FOR WALL TRACKS

BMT	PART NO	DIMENSIONS				GROSS AREA	MOMENT OF AREA		SECTION MODULUS		TORSION Constant	WARPING Constant
		D mm	t mm	Xc mm	Yc mm	mm²	Ixx 10^3 mm⁴	Iyy 10^3 mm⁴	Zxx mm³	Zyy mm³	J mm⁴	Iw mm⁶
0.50	400	52.5	0.50	8.91	26.3	56.7	26.5	6.12	1020	313	4.85	2.84E6
	111	65.2	0.50	8.04	32.6	63.1	43.6	6.57	1348	322	5.38	4.73E6
	402	77.9	0.50	7.32	39.0	69.4	65.9	6.95	1703	329	5.91	7.20E6
	250	93.75	0.50	6.58	46.9	77.0	101.8	7.33	2185	335	6.57	11.2E6
0.70	490	53.1	0.70	8.79	26.6	79.4	37.4	8.40	1430	432	13.3	3.97E6
	492	65.5	0.70	7.94	32.8	88.3	60.7	9.01	1876	443	14.7	6.51E6
	494	78.1	0.70	7.23	39.1	97.2	91.5	9.51	2367	453	16.2	9.86E6
	496	94.5	0.70	6.48	47.3	107.8	143.5	10.1	3061	462	18.0	15.5E6
1.15	660	65.9	1.15	7.53	33.0	142.4	96.1	13.50	2973	589	63.3	9.70E6
	670	78.6	1.15	6.84	39.3	157.0	145.4	14.30	3757	604	69.7	14.8E6
	680	94.5	1.15	6.13	47.3	176.0	225.2	15.00	4826	618	77.8	22.9E6

NOTE: Section properties are approximate only and may be subject to revision

Deflection Head Track

MATERIAL SPECIFICATIONS

Steel Grade: G2 Z275 to AS1397
Yield Strength: Fy – 270 MPa
Coating Grade: Z275 – 275g/m^2 zinc
Ultimate: Fu = 330 MPa

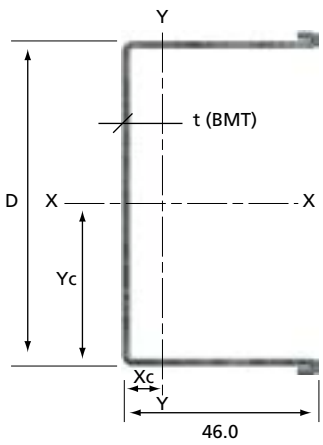

0.70 BMT HEMMED

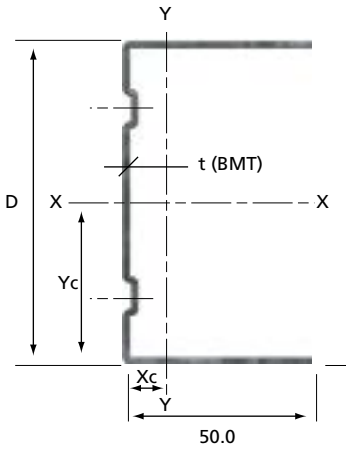

1.15 BMT sections

TABLE 14: SECTION PROPERTIES FOR DEFLECTION HEAD TRACK

BMT	PART NO	DIMENSIONS				GROSS AREA	MOMENT OF AREA		SECTION MODULUS		TORSION Constant	WARPING Constant
		D mm	t mm	Xc mm	Yc mm	mm^2	Ixx 10^3 mm^4	Iyy 10^3 mm^4	Zxx mm^3	Zyy mm^3	J mm^4	Iw mm^6
0.70	488	53.1	0.70	15.9	26.6	105.7	51.0	26.7	1947	920	17.1	13.5E6
	497	65.5	0.70	14.7	32.8	113.7	82.1	28.7	2537	950	18.5	21.7E6
	498	78.1	0.70	13.6	39.1	120.4	122.7	30.4	3174	974	20.0	32.5E6
	499	94.5	0.70	12.4	47.3	133.4	190.2	32.4	4058	999	21.8	50.4E6
0.75	510	152.4	0.75	9.58	76.2	175.0	627.4	40.4	8277	1034	34.9	164.7E6
1.15	663	65.9	1.15	14.7	33	187.8	137.7	47.2	4257	1400	81.5	34.7E6
	673	78.6	1.15	13.6	39.3	204.7	205.3	50.1	5304	1440	88.0	52.3E6
	683	94.5	1.15	12.4	47.3	220.8	312.6	53.2	6701	1480	96.0	80.5E6
	690	152.4	1.15	9.53	76.2	287.5	953.4	61.1	12610	1573	125.4	248.3E6

NOTE: Section properties are approximate only and may be subject to revision

TABLE 15: SCREW FIXING DATA

APPLICATION	RECOMMENDED SCREW	SIZE
FLOORING Joists to Bearers Bearers to Posts Bracketing & Cleats **FRAMING** Tracks to Steel Members Wall Studs to Steel Columns Bracketing & Cleats External Face Connections Plumbing/Electrical Brackets **ROOFING** Trusses to Top Plates Roof Battens to Trusses Bracketing & Cleats Roof Sheeting to Battens Roof Battens to Trusses	**HEXAGON HEAD DRILL POINT**  FOR STEEL UP TO 4mm THICK	8–18 x 12mm 8–18 x 20mm 10–16 x 16mm 10–16 x 22mm 12–14 x 20mm 12–14 x 35mm 14–10 x 20mm 14–10 x 42mm
	 FOR STEEL UP TO 6mm THICK	10–24 x 16mm 10–24 x 25mm 12–24 x 20mm 14–20 x 20mm 14–20 x 22mm 14–20 x 30mm 14–20 x 40mm
FRAMING Studs to Tracks Studs to Studs Bracketing & Cleats Internal Face Connections Plumbing/Electrical Brackets Bracing Straps Noggings to Studs Tracks to Studs **CEILING/ROOFING** Ceiling Battens to Joists Roof Battens to Trusses Bracketing & Cleats	**BUTTON HEAD NEEDLE POINT**  FOR STEEL UP TO 0.8mm THICK	8 x 14mm 8 x 25mm 8 x 32mm
	WAFER HEAD DRILL POINT  FOR STEEL UP TO 4mm THICK	10–16 x 16mm 10–16 x 22mm 10–24 x 16mm 10–24 x 22mm 10–24 x 30mm 10–24 x 40mm
INTERNAL LININGS Plasterboard Wall & Ceilings	**BUGLE HEAD S-POINT/NEEDLE POINT**  FOR STEEL UP TO 0.8mm THICK	6–18 x 25mm 6–18 x 30mm 6–18 x 42mm 7–16 x 50mm 8–15 x 60mm 8–15 x 75mm
	BUGLE HEAD DRILL POINT  FOR STEEL UP TO 6mm THICK	6–20 x 25mm 6–20 x 30mm 6–20 x 45mm

NOTE: Screws should comply with AS/NZS 3566-2 2002 Corrosion Resistance.

APPLICATION	RECOMMENDED SCREW	SIZE
INTERNAL LININGS Fibre cement linings in wet areas	 FOR STEEL UP TO 0.8mm THICK	8–18 x 20mm
	 FOR STEEL UP TO 4mm THICK	8–18 x 25mm
Compressed sheeting to steel studs	 MINIMUM STUD GAUGE ≥ 1.0mm	8–18 x 33mm 8–18 x 38mm 10–24 x 30mm 10–24 x 45mm

TABLE 16: OTHER FASTENERS

APPLICATION	RECOMMENDED SCREW	SIZE
Stud or track fixing to concrete and masonry	 NOTE: TWO FIXINGS FOR TRACKS ≥ 100MM. CHECK BEFORE USING ON FIRE RATED APPLICATIONS	Refer manufacturer's data
Stud or track fixing to steel	 NOTE: TWO FIXINGS FOR TRACKS ≥ 100MM. CHECK BEFORE USING ON FIRE RATED APPLICATIONS	Refer manufacturer's data
Stud or track fixing to concrete and masonry		Refer manufacturer's data

NOTE: Screw fixing information provided by ITW Buildex. Specific details should be checked with the screw manufacturer before commencing work.

GLOSSARY OF TERMS

BCA REQUIREMENTS

The BCA requirements only relate to lightweight fire rated construction, not to partitions in general. There is currently no Australian Standard which covers non-fire rated partition framing specifically. The main presumption is that there is no reason why a fire rated partition should be constructed any differently (in terms of loading and serviceability criteria) than a normal non-fire rated partition.

DEAD LOAD (G)

That part of structure, which is not readily moveable, such as flooring, linings etc. Most dead loads applicable for building materials are detailed in AS1170.1.

As dead loads are present at all times the deflection limits applicable when checking serviceability for dead load only cases are generally more stringent.

DEFLECTION LIMIT

A criterion applied to check the "serviceability" of a partition or ceiling system.

For a non-load bearing partition with "flexible linings" (i.e. plasterboard) the BCA requirements for lightweight partitions H/240 (where H = wall height) provides acceptable serviceability.

Example: if wall height is 2700mm calculation is 2700/240 = 11.25mm max. lateral deflection at mid height of wall.

Normally where brittle finishes (i.e. tiled bathroom) are applied to the partition the deflection limit is increased to H/360. For shelf loaded walls, the deflection limit is generally increased to H/480 to reduce the secondary effects of the shelf load.

Deflection limits can and do vary depending on the use and function of the building, and there are no prescribed limits for non-fire rated partitions.

SINGLE, DOUBLE AND CONTINUOUS SPAN

Single Span:

Where a single member is supported at at each end only.

Double Span:

Where a single member is supported at three points along its length.

Continuous Span:

Where a single member is supported at four or more points along its length i.e. a 6m length of Furring Channel suspended from a Top Cross Rail Grid system.

Where double span and continuous span values are stated, the design assumes that all the spans are equal.

INTERNAL PRESSURE

The design load applied to the soffit of the ceiling, either upward (uplift) or downward.

Sometimes this pressure may be due to the ceiling being used as a pressurised plenum for mechanical services.

The design load may vary in certain parts of buildings depending upon the exposure the ceiling has to the exterior, such as in factories with large roller doors etc. In these situations the contract specification should be consulted or clarification sought from the project coordinators. The direction of the design load is important so the ceiling requirements for "downstrutting" may be determined. Normally the deflection criteria are relaxed for ceilings subjected to wind loads.

LATERAL PRESSURE

The design load applied to the face of the wall.

The BCA requirements for lightweight partitions are sufficient for internal partitions in an effectively sealed building – 0.25kPa.

The design load may vary in certain parts of buildings (i.e. lift shafts, etc.) and for certain building classes (i.e. Class 9B buildings). Also, the design load may vary due to external wind load exposure, such as in factories with large roller doors etc. In these situations the contract specification should be consulted or clarification sought from the project coordinators.

LATERAL PRESSURE TYPE — PERMISSIBLE vs ULTIMATE

As the current design code for Cold-Formed Steel Sections (ASNZS4600) is in Limit State Format it is appropriate that all loads are specified as Ultimate values.

In terms of wind loading the Ultimate wind pressure is 1.5 times higher than the permissible pressure.

LIVE LOAD (Q)

The load resultant from occupancy or use of the building, such as persons walking (floor live loads), storage loads, impact loads etc. Live loads are detailed in AS1170.1, and may vary depending on the use and function of the building.

As live loads are removable or intermittent the deflection limits applicable when checking serviceability for live load cases are generally relaxed, as opposed to dead load.

SERVICEABILITY

A criterion that defines acceptable in-service performance of a partition or ceiling. The criterion is usually specified as a deflection limit, but may also be specified as an acoustic rating.

WIND DOWN (Wd)

The resultant forces from the wind load, which tends to generate compression load in the stud framing. Wind downwards may not occur on every project.

As wind loads are intermittent (i.e. the wind tends to gust) the deflection limits applicable when checking serviceability for wind load cases are generally relaxed, as opposed to dead load.

It is important for the wind up and wind down cases that the wind load is clearly described, and the loading is calculated in accordance with AS1170.2 or AS4055 as applicable.

AS1170.2 Wind Loads is applicable for all normal structures, both low rise and high rise.

AS4055 Wind Loads for Housing is only applicable for buildings with an eaves height of 6.0m and/or a maximum height at any point of 8.5m. In general terms the code applies up to two storey domestic structures or similar.

WIND UP (Wu)

The resultant force from the wind load, particularly on roofs sheeted with metal decking, which tends to generate a tension load in the stud framing. Wind uplift may not occur on every project, such as a tiled roof subjected to an N2 (W33) wind load, under serviceability.

It is important for the wind up and wind down cases that the wind load is clearly described, and the loading is calculated in accordance with AS1170.2 or AS4055 as applicable.